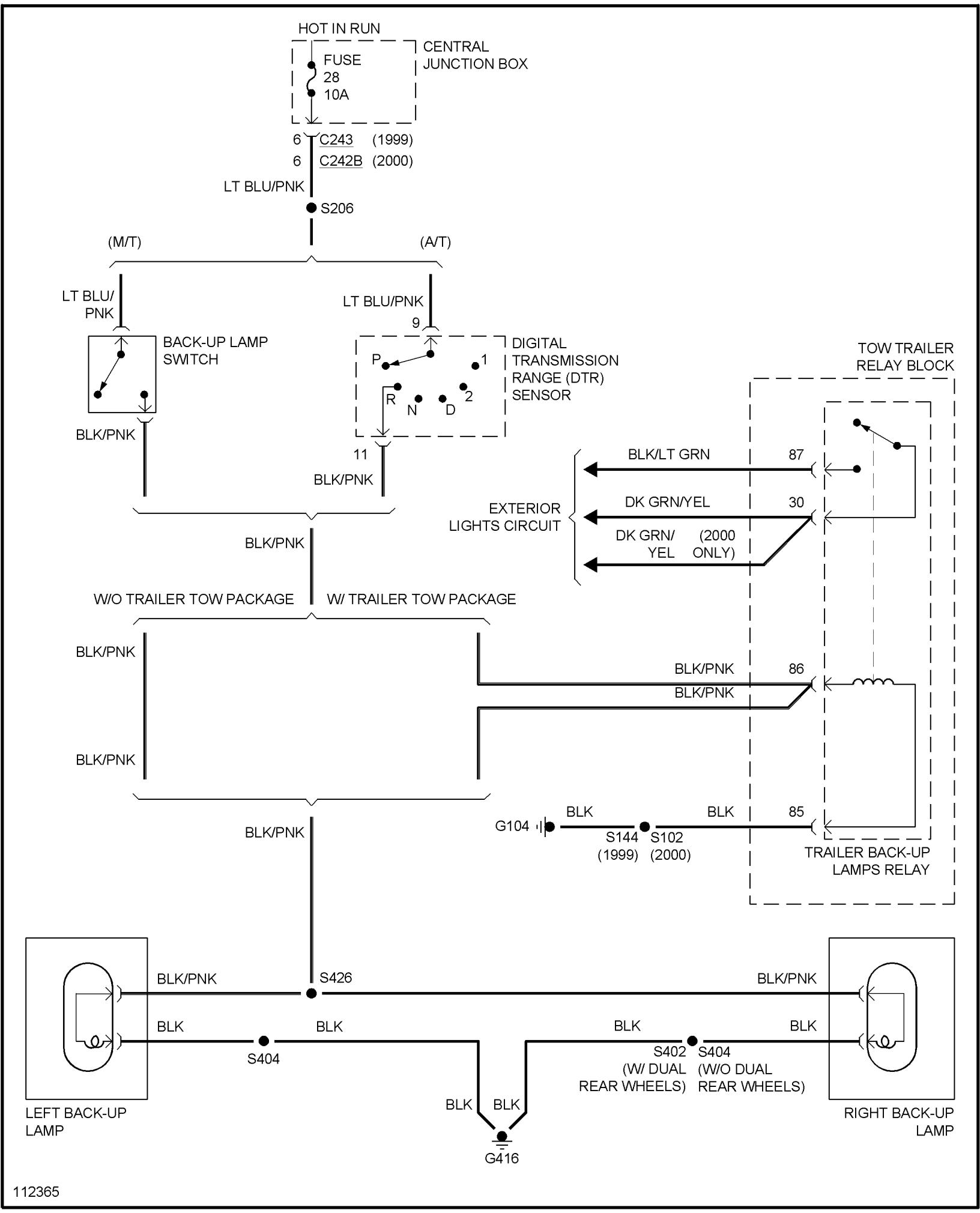
HOT IN RUN
CENTRAL JUNCTION BOX
FUSE 28 10A
6 C243 (1999)
6 C242B (2000)
LT BLU/PNK
S206
(M/T)
(A/T)
LT BLU/ PNK
LT BLU/PNK
9
BACK-UP LAMP SWITCH
DIGITAL TRANSMISSION RANGE (DTR) SENSOR
P
1
R
N
D
2
TOW TRAILER RELAY BLOCK
BLK/PNK
11
BLK/PNK
BLK/LT GRN
87
EXTERIOR LIGHTS CIRCUIT
DK GRN/YEL
30
DK GRN/ YEL
(2000 ONLY)
BLK/PNK
W/O TRAILER TOW PACKAGE
W/ TRAILER TOW PACKAGE
BLK/PNK
BLK/PNK
86
BLK/PNK
BLK/PNK
BLK/PNK
G104
BLK
BLK
85
S144 (1999)
S102 (2000)
TRAILER BACK-UP LAMPS RELAY
BLK/PNK
S426
BLK/PNK
BLK
BLK
BLK
BLK
S404
S402 (W/ DUAL REAR WHEELS)
S404 (W/O DUAL REAR WHEELS)
BLK
BLK
LEFT BACK-UP LAMP
RIGHT BACK-UP LAMP
G416
112365